PARAFLEX

Fast Flexible Focused ***Lighting***

SERIES-3200
AREA / STREET LIGHTS

PFX-3204

Available Options

Trunnion

Slip Fitter

Pole Mount

Product Description:

This slick and modern luminaire has been designed to handle any environment. With a beautiful slimline design along with one of the highest lumen performance on the market, this versatile fixture can be used as a flood light or an area light. Including a multitude of mounting options, surge protection devices, IOT photocell capability, and the most technologically advanced LED's on the market, the PFX-3204 is ready to conquer the lighting landscape.

Optional Kelvin color* with adder.

Features:

LISTING
- ▶UL and cUL listed for wet locations

HOUSING
- ▶One piece die-cast aluminum body with die-cast hinge panel for easy installation access.

LEDS
- ▶The most technologically advanced LED chips in the market

FINISH
- ▶UV stabilized powder coated finish

LENS
- ▶Optional Type III, Type IV, Type V optics

OPTIONS
- ▶Optional 347V or 480V with adder
- ▶Bi-Level Dimmable or Photocontrol optional available with adder
- ▶Finish - Bronze. Color option with adder
- ▶Standard 4kV surge

PARAFLEX does not warrant or represent that the information is free from errors or omission. The information may change without notice and PARAFLEX is not in any way liable for the accuracy of any information printed and stored or in any way interpreted or used.

A 3 Luger Rd. #1 - Denville, NJ 07834 E info@paraflex.com W www.paraflex.com P 973-340-6040

IP65

PARAFLEX
Fast Flexible Focused **Lighting**

AREA / STREET LIGHTS

PFX-3204

Performance Data

Model No.	Nominal Watts**	Dist. Type	Lumens**	Efficacy**	Input Voltage
PFX-3204	235 W	Type III	39692 lm**	172 lm/W	UNV=120-277V
	258 W	Type III	42696 lm**	164 lm/W	UNV=120-277V
	255 W	Type III	42237 lm**	166 lm/S	HV4=347-480V

Specification:

Example:PFX-3204

Model No.	Nominal Watts**	Input Voltage	CRI	Color Temp	Distribution	Option		Finish	Starting Temp
						Accessories	Mounting		
PFX-3204	**235**=235W **258**=258W **255**=255W	**UNV**=120-277V **HV4**=347-480V	7=70+	**40**=4000 K **50**=5000 K	**T3**=Type III **T4**=Type IV **T5**=Type V	**XS**=10kv Surge **OS**=Occupancy Sensor **PE**=Photocontrol **3R**=3-pin Receptacle **5R**=5-pin Receptacle **7R**=7-pin Receptacle	**PM**=Pole Mount **SF**=Slip Fitter **U**=U Bracket	**BZ**=Bronze	**-40°C**

Dimension:

PFX-3204PM

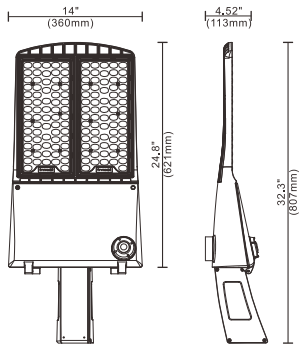

PFX-3204SF

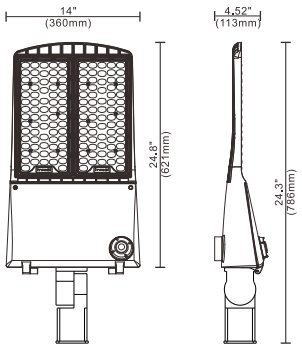

PFX-3204TR

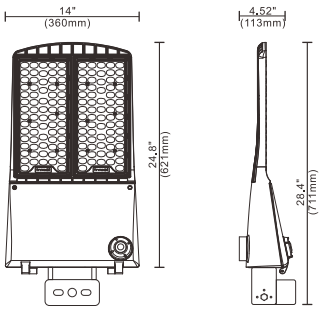

* Different LED Kelvin temperature available with 4-6 week lead time. Please call for a quote.
** DISCLAIMER: This test report was produced in accordance with IES LM-79 photometric testing protocol for luminaires, using a single representative test fixture. Actual production units may vary from the values reported here by up to ±10%.

IP65

PARAFLEX does not warrant or represent that the information is free from errors or omission. The information may change without notice and PARAFLEX is not in any way liable for the accuracy of any information printed and stored or in any way interpreted or used.

A 3 Luger Rd. #1 - Denville, NJ 07834 E info@paraflex.com W www.paraflex.com P 973-340-6040